RevNo	Revision note	Date	Signature	Checked
V1.0	Sketch only	28/07/2021		

RoHS Compliant.

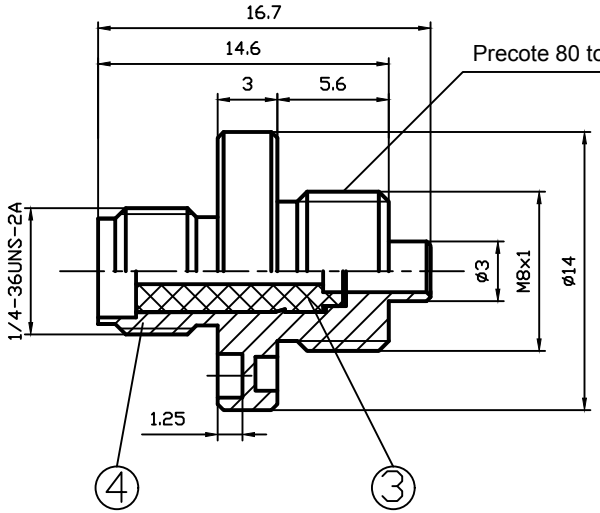

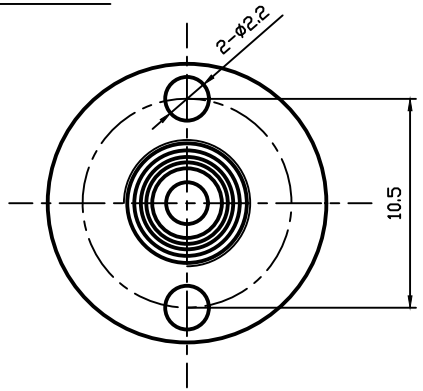

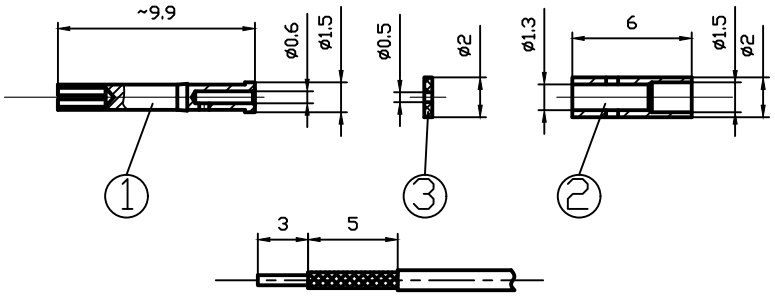

Suggested stripping

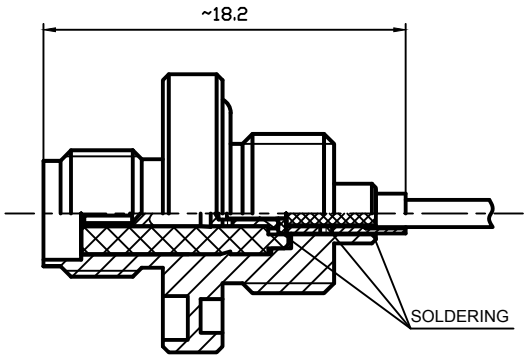

USER GUIDE

Interface Per: MIL-STD-348, IEC 61169-16
Cable Type: Mic-1.37

Material & Finishing:
1. Center condutor: Phosphor Bronze, Chemical Nickel-Gold Plating 0.03um
2. Drivepipe: Brass, Gold Plating 0.03um
3. Insulators: PTFE
4. Body : Brass, Chemical Nickel-Gold Plating 0.03um

Electrical Data:
1. Impedance: 50 Ohms
2. Frequency: 0~6 GHz
3. Roturn loss: > 15dB
4. Voltage rating: 750 Veff Maxi
5. Dielectric withstanding voltage: 200 Veff mini

Unless otherwise specified, tolerances as below:	Material:	See Notes	Weight	g	LenoRF	
.x ±0.15	Finish:	See Notes	Scale	5 : 1		
.xx ±0.1	Unit	mm	Page	01		
.xxx ±0.05	REV.	V1.0	p/n	01	DWG NO.	3.01.124
Angle: ±2°						
Drawn		DATA:	Projection		Cust P/N.	TBD
Checked		DATA:	Title:			
Approved		DATA:				

SMA JACK FOR Mic-1.37