| RevNo | Revision note | Date | Signature | Checked |
|---|---|---|---|---|
| V1.0 | Sketch only | 01/07/2026 | | |

RoHS Compliant.

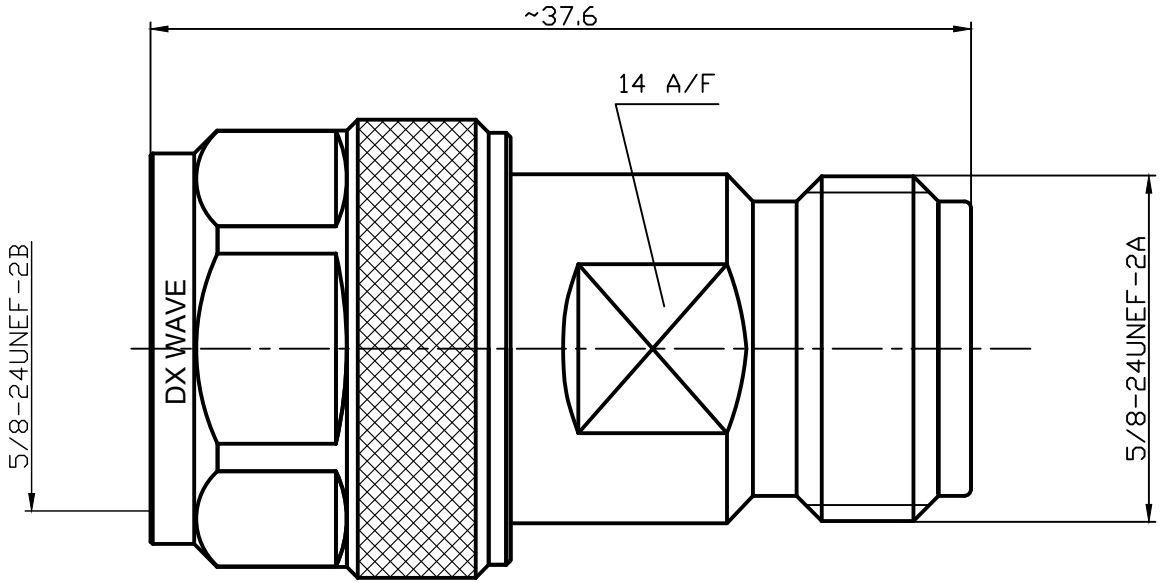


**Interface Per:** MIL-STD-348,

**Material & Finishing:**

1. Center condutor: Phosphor Bronze, Gold Plating
2. Insulators: PTFE
3. Body : Brass, Ternary alloy Plating

**Electrical Data:**

1. Impedance: 50 Ohms
2. Frequency: 0~18GHz
3. VSWR: ≤1.3
4. Insertion loss: ≤0.2
5. Proof Voltage : 500 Veff
6. Working voltage: 350 Veff

**Package :** 1 PC per bag

**Laser Mark:** DX WAVE

Label Content:

DX WAVE
Part No: DX-3-17-180
Part Name: N JACK TO N PLUG ADAPTOR
QTY: 1 PC
Date: WW/YY (Week/year)

| | | | | | | |
|---|---|---|---|---|---|---|
| Unless otherwise specified, tolerances as below: .x ±0.15 .xx ±0.1 .xxx ±0.05 Angle: ±2° | Material: | See Notes | Weight | g | DX WAVE | |
| | Finish: | See Notes | Scale | 8 : 1 | | |
| | Unit | mm | Page | 01 | | |
| | REV. | V1.0 | p/n | 01 | DWG NO. | DX-3-17-180 |
| Drawn | | DATA: | Projection | | Cust P/N. | TBD |
| Checked | | DATA: | Title: N JACK TO N PLUG ADAPTOR | | | |
| Approved | | DATA: | | | | |